Tapco integrated tool systems

TAPCO MAX-I-MUM II COMMERCIAL MODEL PORT-O-BENDER

Operations Manual

Used for commercial, architectural and industrial sheet metal fabrication

Brings Commercial Bending Power to the Job Site

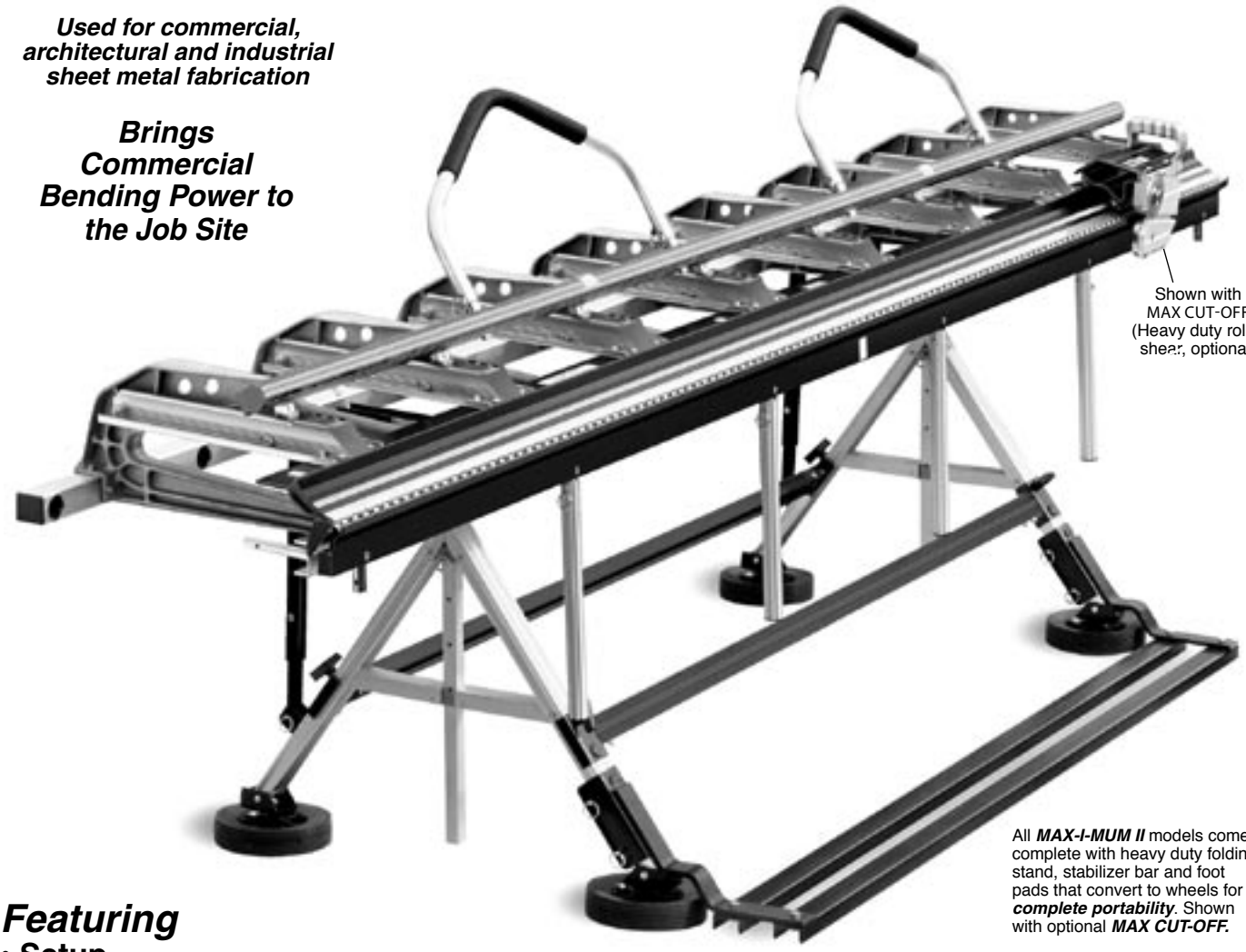

Shown with MAX CUT-OFF (Heavy duty roller shear, optional)

All ***MAX-I-MUM II*** models come complete with heavy duty folding stand, stabilizer bar and foot pads that convert to wheels for ***complete portability***. Shown with optional ***MAX CUT-OFF.***

Featuring

- **Setup**
- **Basic Operations**
- **Capacity Chart**
- **Parts List**
- **Adjustment, Care & Maintenance**
- **Examples of Basic Shapes**

Manufactured under one or more of the following U.S. Patents:
3,161,223 4,321,817 4,651,553 4,489,583 4,493,200
4,445,356 4,372,142 4,766,757 3,817,075 4,557,132
4,240,279 4,671,094 3,482,427 4,494,397 3,559,444
5,343,728 5,353,620 5,505,069 Other U.S. & Foreign Pats. Pend.

Tapco Products Company

MAX-I-MUM II PORT-O-BENDER

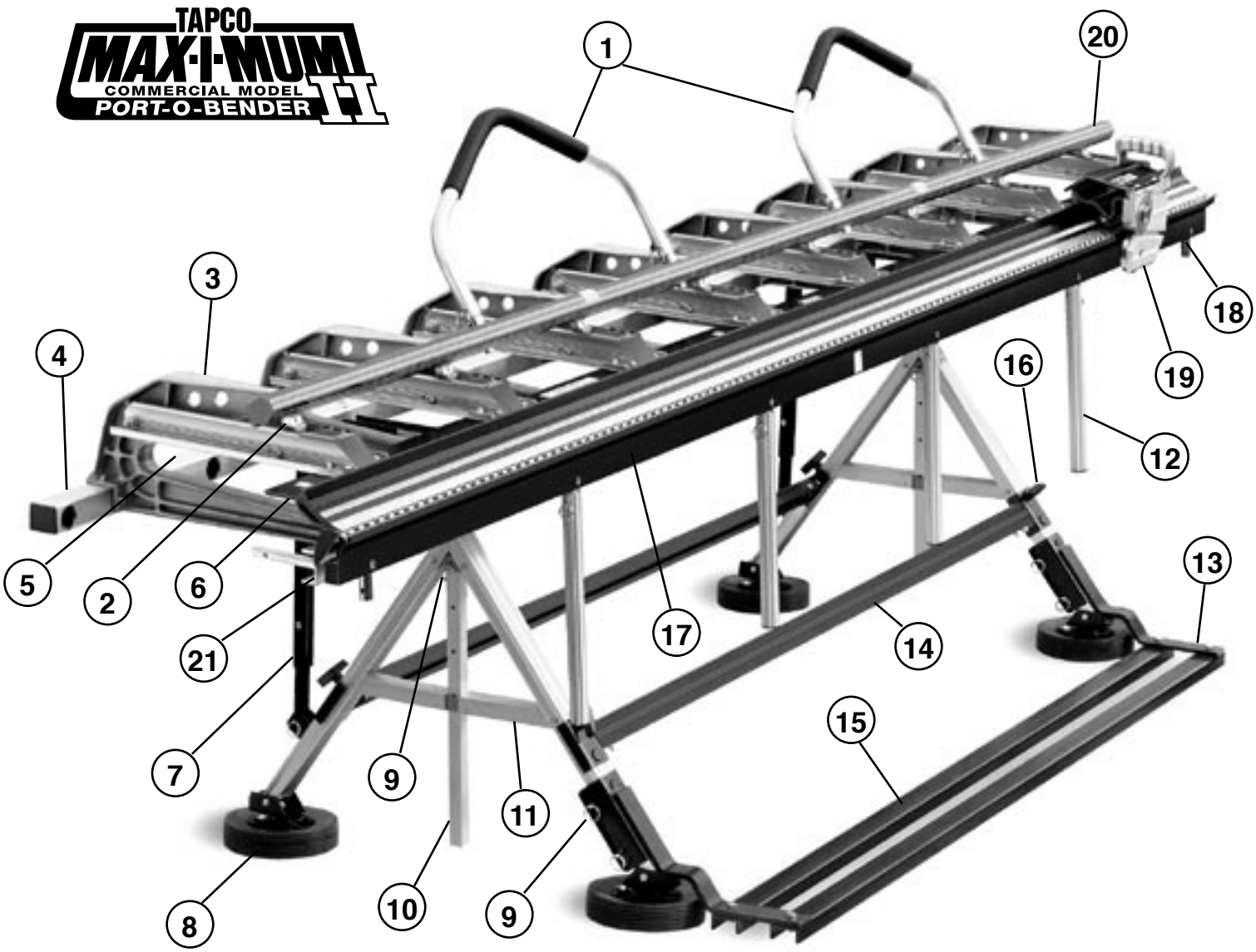

A basic overview of MAX-I-MUM II part names and locations. (Detailed parts list on page 6.)

MAX-I-MUM II PORT-O-BENDER QUICK REFERENCE GUIDE

1	Hemming Handles
2	Pivot Links
3	Castings
4	Back Rail
5	Throat Depth
6	Anvil
7	Strut
8	Wheel
9	Faspin
10	Vertical Support
11	End Assembly

12	Lifting/Bending Handle
13	Stabilizer Assembly
14	Cross-Brace
15	Foot Rails
16	"T" Knob
17	Moving Hinge
18	Handle Plug
19	Max Cut-Off (optional)
20	Locking Handle
21	Base Hinge

MAX CUT-OFF®

Makes factory quality cuts in commercial metals right on your MAX-I-MUM II Port-O-Bender

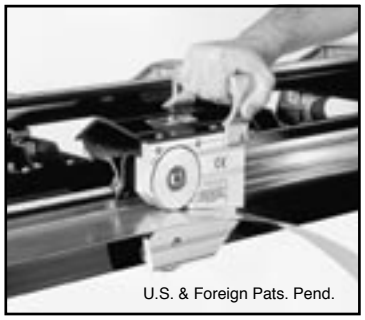
U.S. & Foreign Pats. Pend.

MAX CUT-OFF Features

- Heavy duty roller shears.
- Hardened and captured tool steel cutting knives for safety and durability.
- Eliminates the need for unsafe utility knives and conventional shears.
- Pays for itself by reducing scrap and costly knifing damage to bending hinges.

MAX CUT-OFF Capacities

- Up to **.050** aluminum. All vinyl.
- Up to **20 ga.** galvanized steel
- Up to **32 oz.** copper
- Up to **24 ga.** stainless steel

MAX STAND INSTALLATION INSTRUCTION

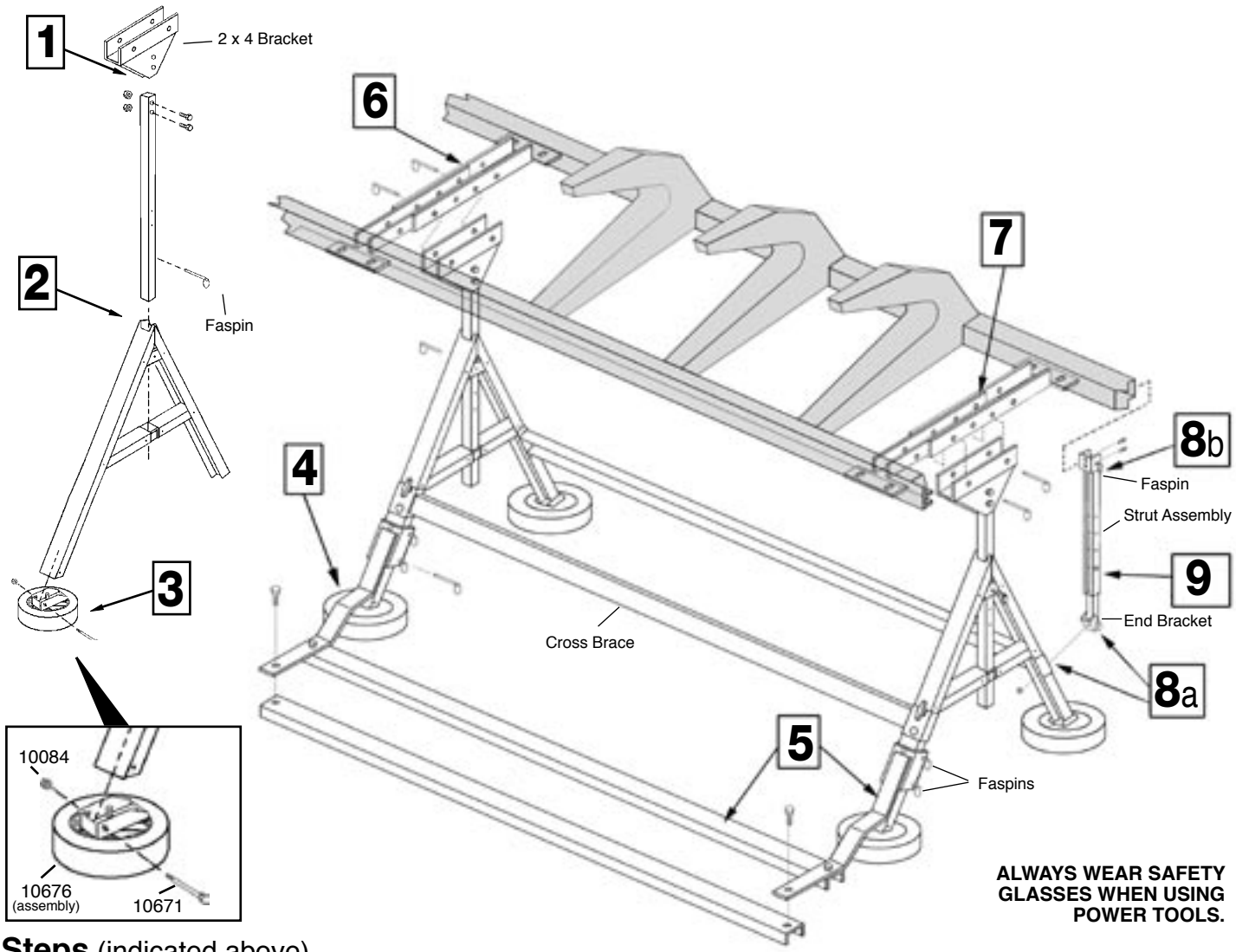

ALWAYS WEAR SAFETY GLASSES WHEN USING POWER TOOLS.

Steps (indicated above)

1. Remove all parts from box. Attach 2 x 4 Bracket to Vertical Support using 1/4-20 x 1 1/2" Hex Bolts and 1/4-20 2-Way Lock Nuts.
2. Slide Vertical Support into End Assemblies, securing with Faspin (part #10678).
3. Attach Wheel Assembly to End Assembly using 1/4-20 x 2 1/2" Hex Cap Bolt and 1/4-20 2-Way Lock Nut.
4. Fold wheels to pad position (as indicated in diagram) and stand End Assemblies apart. Attach Cross Braces to each Assembly (**see Detail A**). Align and tighten all 4 "T" Knobs snugly in place.
5. Install Stabilizer End Brackets. Insert all 4 Faspins into sides of End Bracket. Align Stabilizer Channels with End Brackets and install all 4 bolts through End Brackets and into each corner of Channels (10688 or 10689). (See Detail A also)
6. Assemble both Brake Brackets (**see Detail B** for correct hole positions) securing with hex nuts. Attach Brake Brackets to Bender with the (8) self-tapping screws provided (**see Detail C**).
7. Lift and lower Bender onto Max Stand by seating Brake Brackets into center of 2x4 Brackets. Align holes in Brackets and insert all Faspins.
8. Detach End Brackets from Strut Assembly and install to rear Outside Channels **(8a)** and Back Rail **(8b)** using 3/8-16 x 1" Hex Bolt **(8a)** and 1/4-20 x 3/4" Hex Wash HD Screw **(8b)**. Re-attach to struts with faspins.
9. Adjust Strut Assembly by sliding Upper Strut over Lower Strut and install 1 1/2" bolt through proper Strut alignment hole and into both sections of Strut and tighten with hex nut.

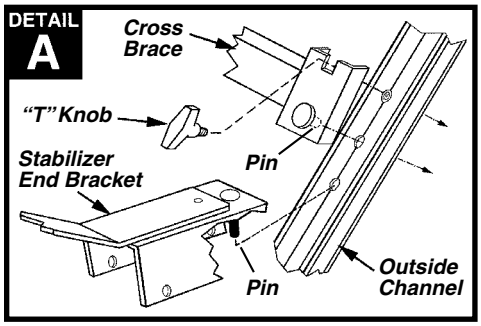

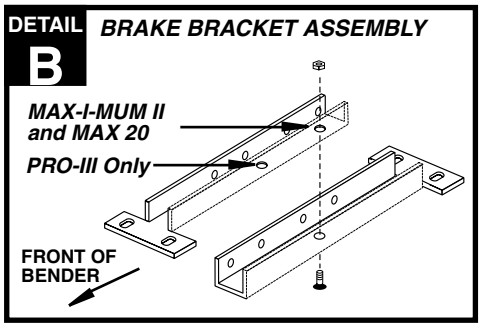

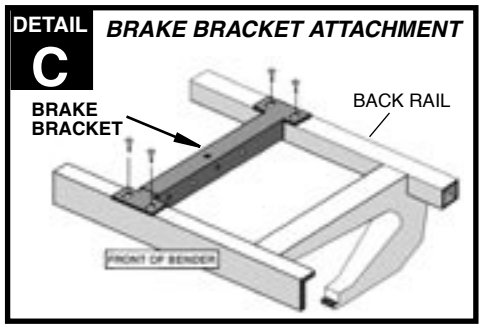

SETTING UP YOUR MAX-I-MUM II PORT-O-BENDER®

Hemming Handle Installation

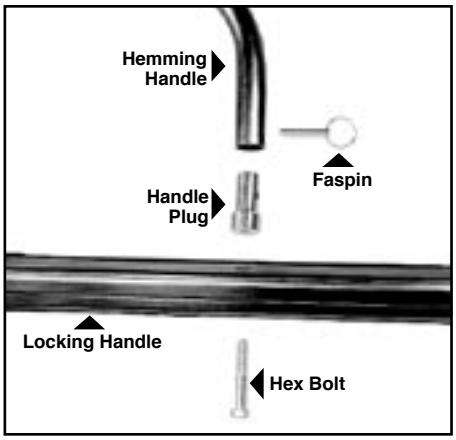

The MAX-I-MUM II Hemming Handle Assembly includes: (2) Hemming Handles, (4) Handle Plugs, (4) Faspins, (4) Hex Bolts.

Insert Hex Bolt through Locking Handle of your Port-O-Bender and into base of Hemming Handle as indicated using the 3/8" Hex Bolts provided. HAND TIGHTEN ONLY. Repeat for other side.

Attach the Hemming Handle over the Handle Plugs and secure them with Faspins. Now tighten the 3/8" Hex Bolts with a 9/16" wrench. Handle can be detached from now on by simply removing the Faspins.

Lifting/Bending Handle Installation

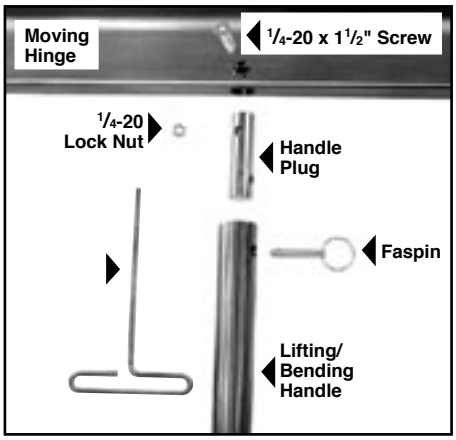

Exploded view of Handle Assembly — First insert one end of Handle Plug into Lifting/Bending Handle and install Faspin through holes.

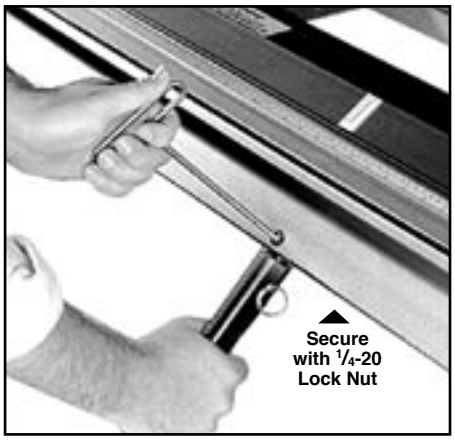

Next, insert Handle Assembly into hole in bottom of Moving Hinge. Align hole in hinge with Handle Plug and insert screw using Allen wrench as shown. Secure with 1/4-20 Lock Nut.

Repeat for other handles. To remove handles now, simply release Faspins. Always use more than one handle when bending.

Hinge Clip Installation

The Hinge Clip keeps the Moving Hinge in position for ease of aligning material. It can also prevent rippling of the material during cut off operations.

To install Hinge Clip, locate predrilled hole on bottom center of Moving Hinge. Align holes in Clip and Hinge as shown and insert Phillips head screw provided.
Note: You must engage Hinge Clip for proper operation of Max Cut-Off.

ADJUSTING YOUR MAX-I-MUM II PORT-O-BENDER®

Pivot Link Adjustment Instructions

IMPORTANT: Your Port-O-Bender® incorporates an advanced new Micro-Adjust system that enables you to adjust the gripping tension on material faster and easier than ever. The Pivot Links have been pre-set at the factory for average holding capacity and ease of operation. **However, it's important that you readjust your Port-O-Bender® to your stock thickness.** Your Port-O-Bender® may also need periodic adjustment due to extreme weather and/or working conditions. It is important that you follow these steps when you adjust your Port-O-Bender® to ensure proper gripping tension and maximum performance.

Figure 1

First check the uniformity of the clamping pressure along the entire length of your Port-O-Bender® by using the following method.

TO TEST —

Cut some narrow strips of aluminum or use strips from the stock you will be using and lock one under ***each*** shoe casting as indicated in Figure 1. Then lightly pull the material to determine the tightness and uniformity of each Pivot Link. Refer again to **Figure 1**. If the material can be moved when the Port-O-Bender® handle is locked or if it requires excessive pressure to lock the handle down on the material then the Pivot Links may need adjustment.

NOTE: All adjustments are ***made*** with the Port-O-Bender® in the "open" position. All adjustments are ***tested*** with strips of material placed in the Port-O-Bender® in the "locked" position.

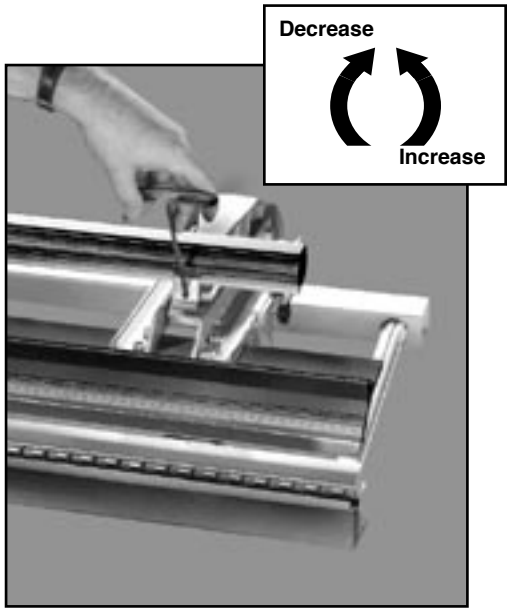

Figure 2

TO ADJUST —

Insert the **3/16"** hex wrench provided into the Pivot Link Stud through the access hole in the upper link. (See **Figure 2.**) Turn **1/4** turn either *COUNTER-CLOCKWISE* to **INCREASE** locking tension or *CLOCKWISE* to **DECREASE** locking tension.

Repeat test step above to check tension.

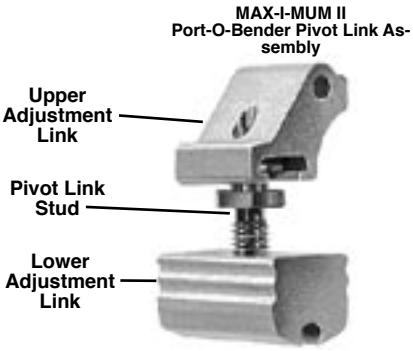

TO ADJUST (Optional method)—

As an alternate method you may use a 5/8" open-end wrench directly on the Pivot Link Stud by turning **1/4** turn either *COUNTER-CLOCKWISE* to **INCREASE** locking tension or *CLOCKWISE* to **DECREASE** locking tension. (See **Figure 3.**)

Repeat test step above to check tension.

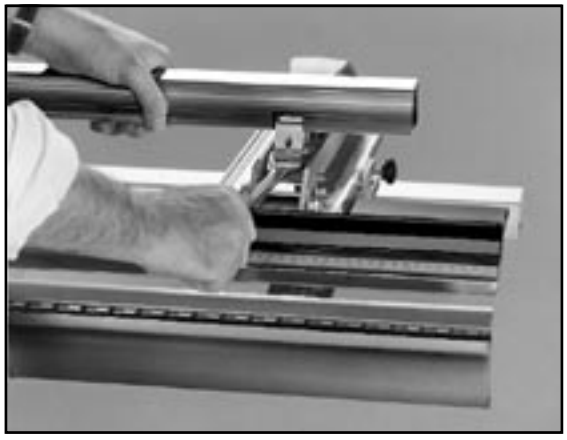

Figure 3

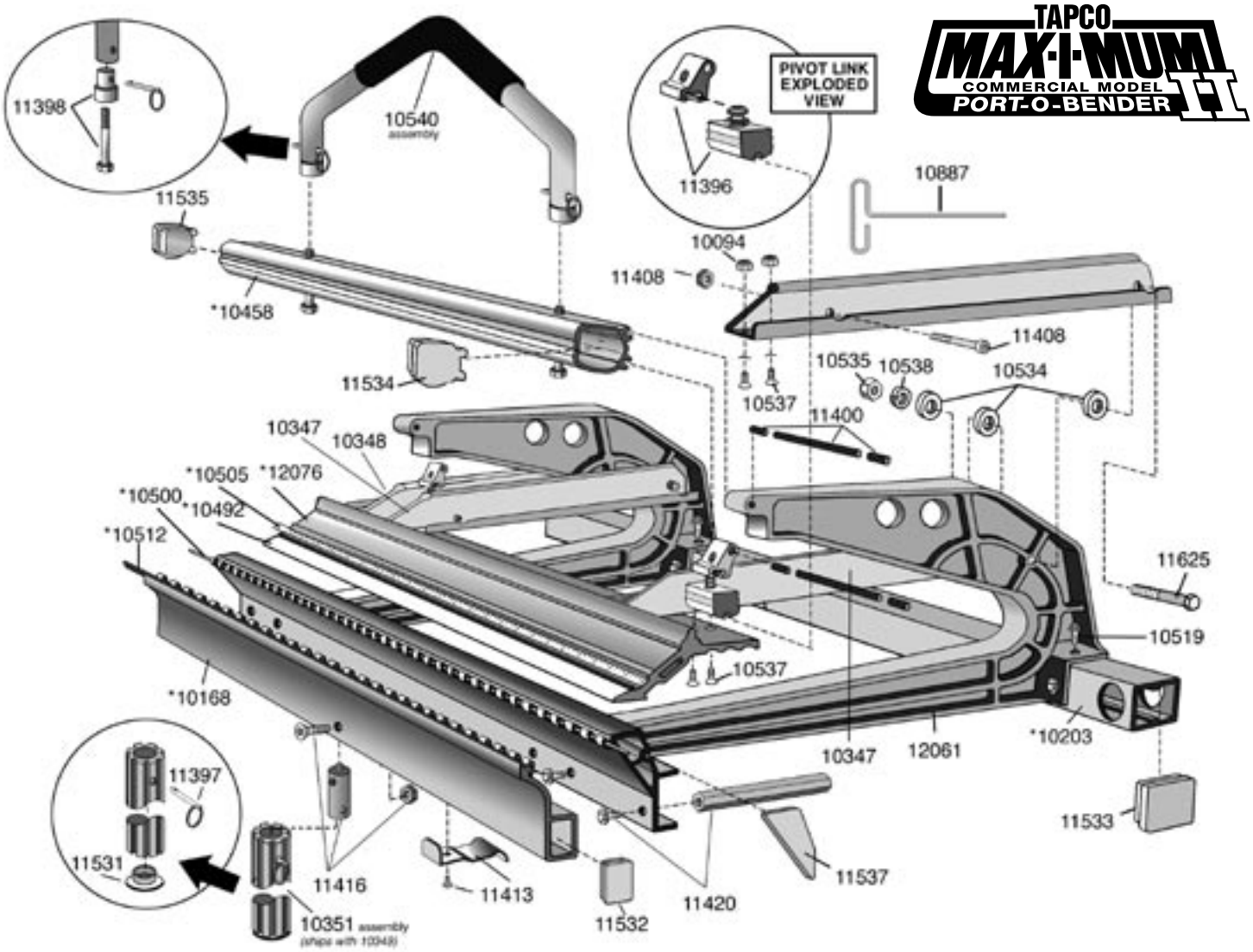

*For Model Specific Parts, 10' part numbers are shown in diagram.

Item #	Description
10094	1/4-20 Hex Flange Nut
10166	8'6" Moving Hinge
10168	10'6" Moving Hinge
10170	12'6" Moving Hinge
10172	14'6" Moving Hinge
10177	8'6" Base Hinge
10180	10'6" Base Hinge
10183	12'6" Base Hinge
10186	14'6" Base Hinge
10201	8'6" Back Rail
10203	10'6" Back Rail
10205	12'6" Back Rail
10207	14'6" Back Rail
10347	Pivot Arm-Left
10348	Pivot Arm-Right
10351	Lifting Handle Assembly
10454	8'6" Locking Handle
10458	10'6" Locking Handle
10462	12'6" Locking Handle
10464	14'6" Locking Handle
10491	8'6" Stainless Edge
10492	10'6" Stainless Edge
10493	12'6" Stainless Edge
10494	14'6" Stainless Edge
10499	8'6" Hinge Pin
10500	10'6" Hinge Pin

Item #	Description
10501	12'6" Hinge Pin
10502	14'6" Hinge Pin
10504	12'6" Tape Measure
10505	10'6" Tape Measure
10506	8'6" Tape Measure
10511	8'6" Vinyl Strip
10512	10'6" Vinyl Strip
10513	12'6" Vinyl Strip
10514	14'6" Vinyl Strip
10519	1/4–20 x 3/4" Hex Wash HD Sc
11625	3/8-16 X 3 1/4" Hex Cap Bolt
10534	3/8" Flat Washer
10535	3/8-16 Nylock Hex Nut
10537	1/4-20 X 3/4 FL HD Sc
10538	3/8" Lock Washer
10540	Hemming Handle Assembly
10887	T-Handle Hex Key
11531	Lifting Handle Cap
11532	Moving Hinge Cap
11533	Back Rail Cap
11534	Locking Handle Cap-Right
11535	Locking Handle Cap-Left
11536	Base Hinge Cap-Left
11537	Base Hinge Cap-Right
11396	Pivot Link Assembly Kit (6)
11397	1/4" x 1 1/4" Faspin Kit (4)

Item #	Description
11398	Handle Plug Hemming Kit
	Hemming Handle Plugs (2)
	3/8–16 x2 1/4" Bolt
11400	Locking Handle Pin Kit
	10 pins, 20 keepers
11408	Bolt and Nut Kit
	1/4–20 x 2 1/2" Bolt (5)
	1/4–20 Nulok Nut (5)
11413	Hinge Clip Kit
11416	Max Handle Plug Kit
	MAX Lifting Handle Plugs (2)
	1/4–20 x 1 1/2" Bolt (2)
	1/4–20 Nylok Nut (2)
11420	Coupling Nut Kit
	Coupling Nut Kit (2)
	1/4–20 x 3/4" Screw (2)
12042	MAX-II Parts Bag 10'/12'
12055	MAX-II Parts Bag 8'
12056	MAX-II Parts Bag 14'
12061	C Casting
12075	8'6" Locking Anvil
12076	10'6" Locking Anvil
12077	12'6" Locking Anvil
12078	14'6" Locking Anvil

Care and Maintenance of your Port-O-Bender®

Your Tapco Port-O-Bender® is virtually maintenance free and will provide you with years of reliable and trouble-free performance, however, there are a few basic necessities required to keep your Port-O-Bender® like new.

1. Clean the clamping surfaces each day before using. Use only clean shop towels that are free of dirt, oil and metal chips.
2. Do not use your bender around your saw table as the cuttings may get in between clamping surfaces and cause excessive wear or material scratching. Brush away any cuttings or filings that accumulate.
3. Transport your Port-O-Bender® in the unlocked position. You may transport it in the locked position if you clamp a piece of cardboard or vinyl siding between the clamping surfaces.
4. If your material is getting scratched, examine the Stainless Bending Edge, Base Hinge and Moving Hinge for roughness or burrs. Remove burrs with emery cloth or replace excessively worn parts. Optional Pro Cut-Off will help eliminate excessive wear to costly bending edge.
5. Use a lightweight spray oil along the moving pivot hinge after every 40 hours of use.

For Your Records

Complete the information below and save with this manual for future reference.

Model and Serial Number

Date and Place Purchased

EXAMPLES OF BASIC SHAPES

NOTE: UP & DOWN refers to the clad, painted or FINISH SIDE of the material as it is placed into the Bender.

1. Gravel Stop

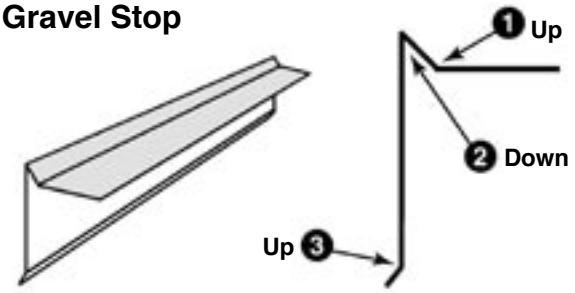

2. Coping Cover

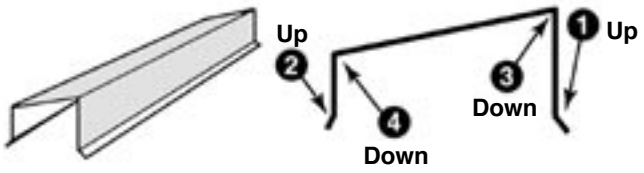

3. One Piece Soffit Mitre

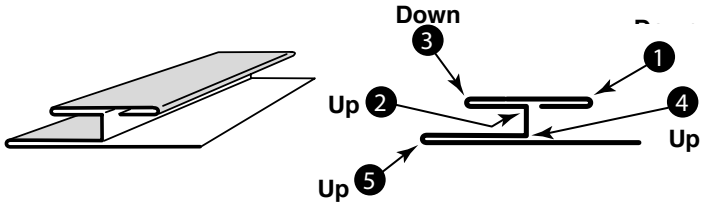

4. Reglet Flashing

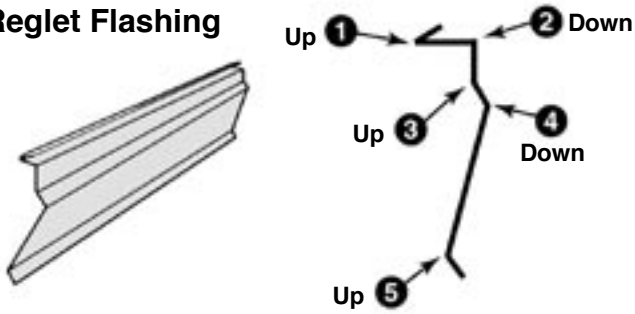

5. Hip/Ridge Cap

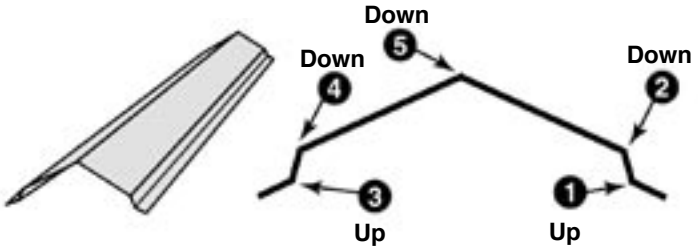

6. Outside Corner

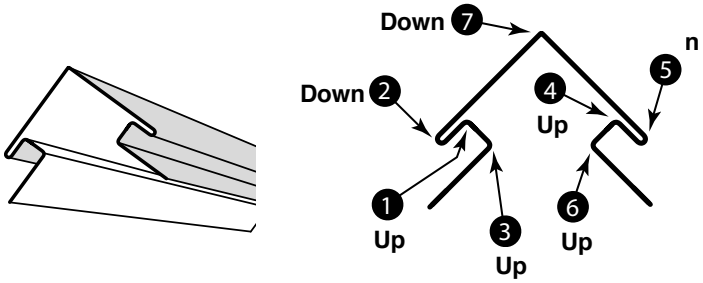

7. Counter Flashing

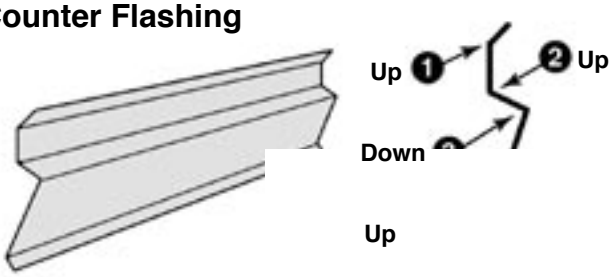

8. Brick Frieze

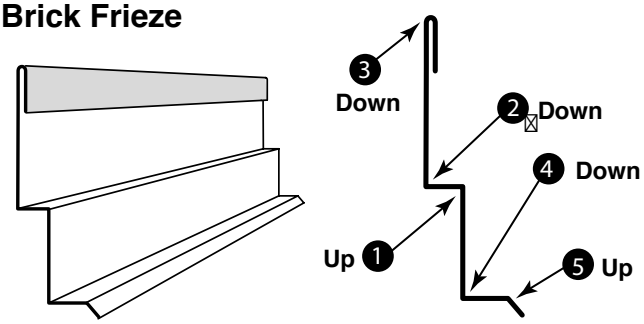

9. "F" Channel/Inside Corner

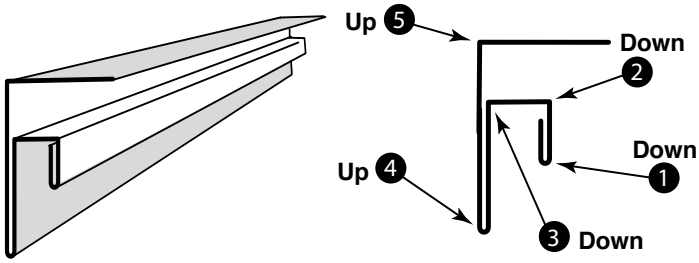

10. "D" Style Gutter

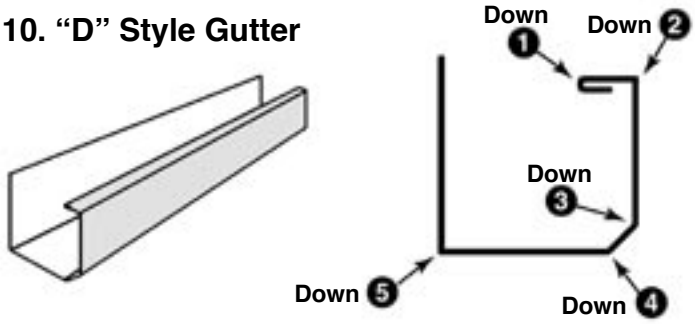

©2003 Tapco International Corporation

Item #10814
T2029-LS 9/03