PENETRATOR
MOBILE FALL PROTECTION

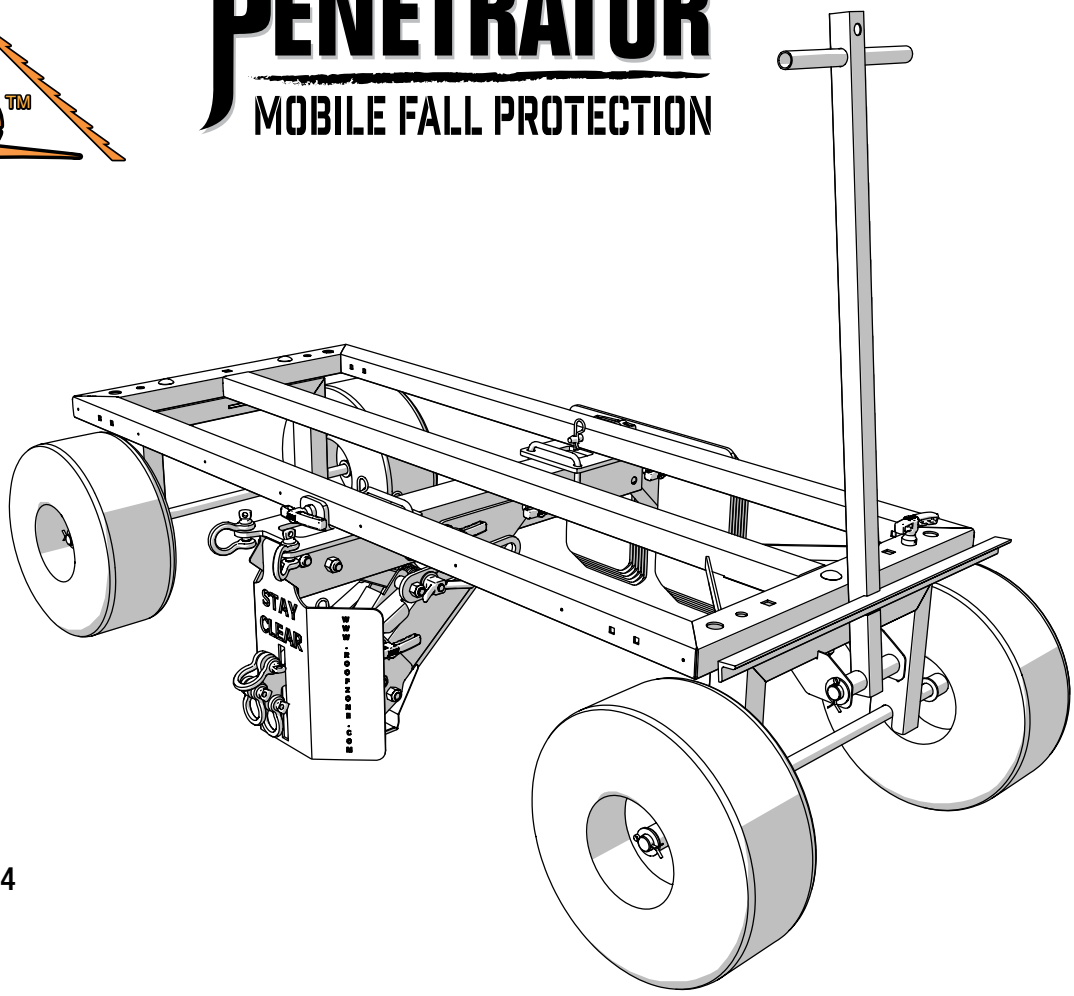

Roof Zone Cart
Part #65033

Penetrator Fall Protection Device
Model #40620-A
Model #40620-B

U.S. Patent 9,675,824

⚠ WARNING ⚠

Serious injury or death may occur if this equipment is used for purposes other than intended. Tie Down Engineering provides the following instructions for the use and care of this equipment. It is the responsibility of the user to understand and convey proper instruction to any and all individuals who use this product for Fall Arrest and or Fall Restraint. The Penetrator complies with the requirements set forth by the Federal Occupational Safety and Health Administration (OSHA) when used according to the manufacturers' instructions.

The Penetrator was designed and tested only to be used on the Roof Zone Trailer #65028 with Flat Free Tires.

Instruction Sheet #08261
Rev. 4/11/17

TIE DOWN ENGINEERING • Atlanta, GA 30336
www.tiedown.com (404) 344-0000

E1446; 041117

PENETRATOR
MOBILE FALL PROTECTION

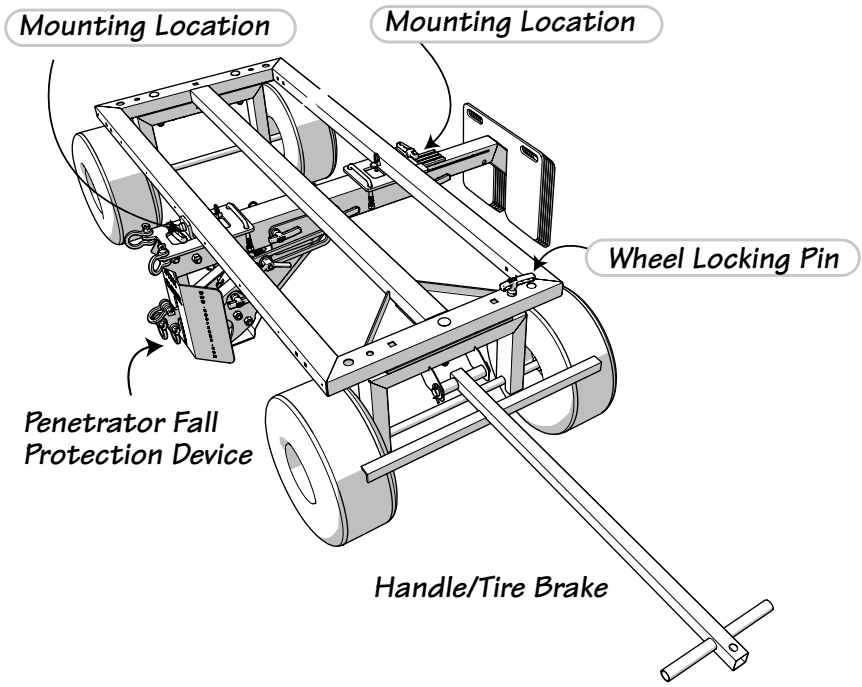

This operations manual covers Penetrator Models:

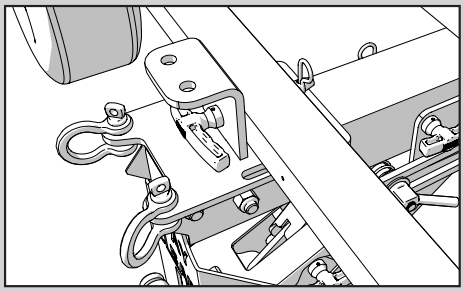

Model 40620-A
(Lift handle on the outside)

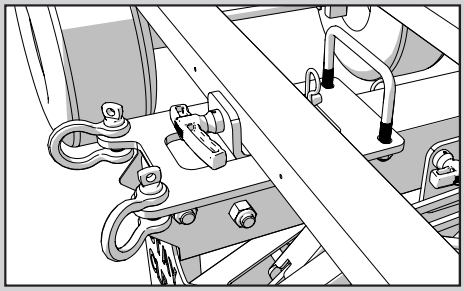

Model 40620-B
(Lift handle on the inside)

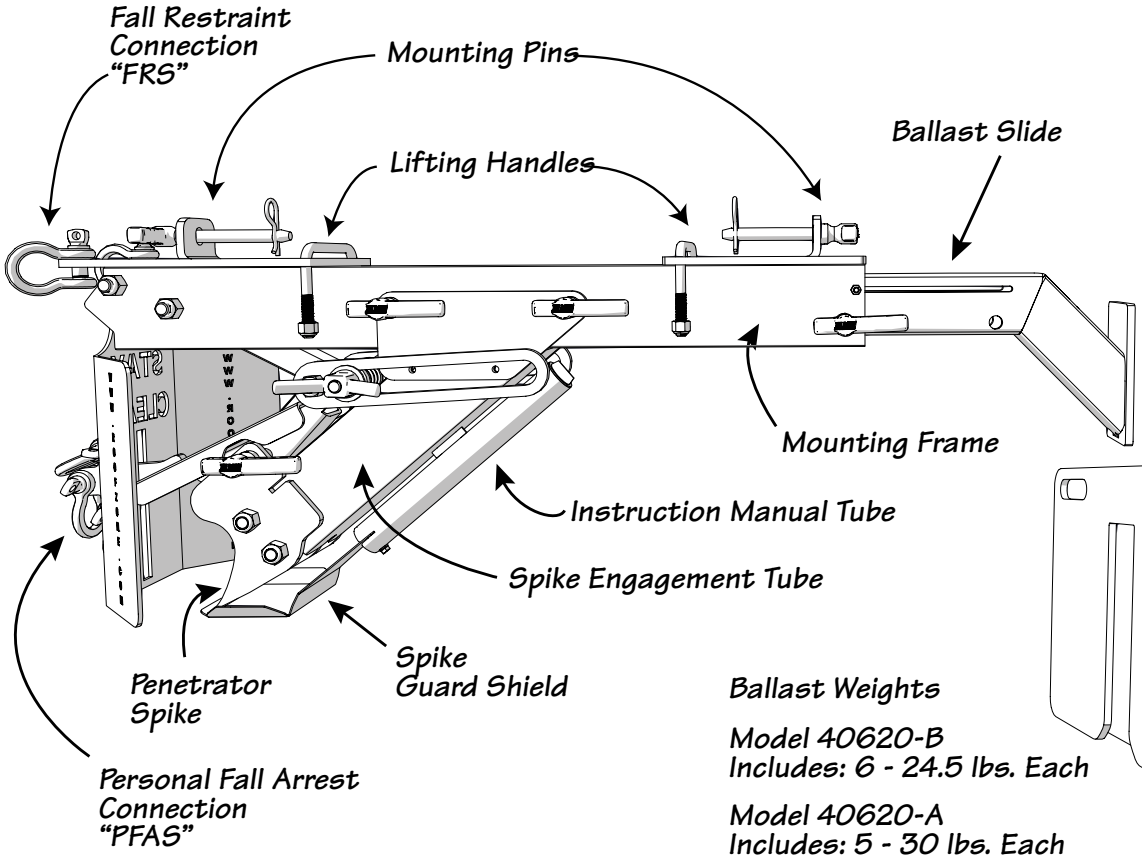

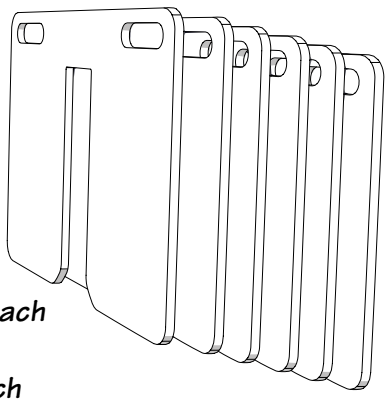

Ballast Weights

Model 40620-B
Includes: 6 - 24.5 lbs. Each

Model 40620-A
Includes: 5 - 30 lbs. Each

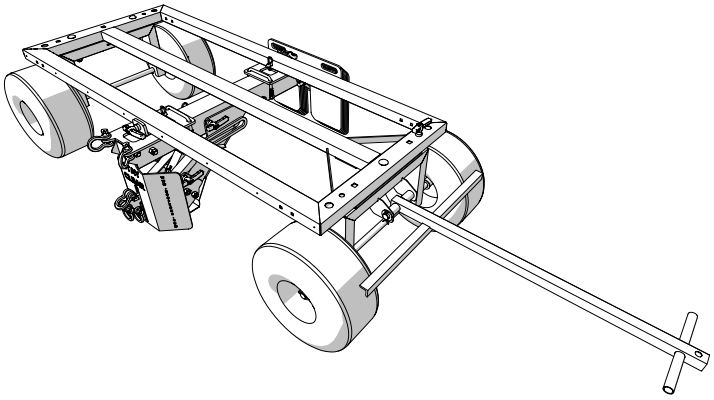

PENETRATOR
MOBILE FALL PROTECTION

Applications

When set up properly the Penetrator allows for three workers to be tied off for fall arrest using the specially designed fall arrest connection mechanism with three individual attachment points. An additional two workers can be tied-off for fall restraint at the specified attachment points.

The Penetrator in conjunction with the Roof Zone cart may be used as an anchor point in a complete mobile fall protection system. The Penetrator with cart allows both worker mobility and fall protection. See www.osha.gov for all regulations and standards.

Fall Restraint System – A fall restraint system (FRS) prevents the user from falling. The system is comprised of a body harness along with an anchorage, connectors and other equipment. The components typically include a lanyard and also may include a lifeline and other devices. The Penetrator can be used as an anchorage in a fall restraint system for up to two workers.

Personal Fall Arrest System – A personal fall arrest system (PFAS) arrests a fall after a fall incident has occurred. The system is comprised of an anchor point, connecting device, body harness, connectors, and a body harness and must include a deceleration system, or suitable combinations. Note that a PFAS does NOT prevent a fall from occurring. The Penetrator can be used as an anchorage in a PFAS for up to three workers. A Personal Fall Arrest System must meet the following OSHA requirements:

- Limit maximum arresting force on an employee to 1,800 pounds when used with a body harness;
- Be rigged (lifeline plus deceleration device) so that an employee can neither free-fall more than 6 feet (1.8 meters) nor contact any lower level;
- Bring an employee to a complete stop and limit maximum deceleration distance an employee travels to OSHA 3.5 feet (1.07 meters); and 4 ft. per ANSI 359.
- Have sufficient strength to withstand twice the potential impact energy of an employee free-falling a distance of 6 feet (1.8 meters) or the free-fall distance permitted by the system, whichever is less.

Anchorage — An anchorage is a secure point of attachment for lifelines, lanyards, or deceleration devices. The Penetrator is a mobile anchorage.

Penetrator Use - For use on low slope surfaces only.

Applications: Surfaces

Recommended Surfaces:

- ✔ Gypsum Deck
- ✔ Modified Bitumen Membranes
- ✔ Built-up Roofing (BUR) Membrane
- ✔ Modified PVC Membranes
- ✔ Thermoplastic Polyolefin (TPO) Membranes
- ✔ Polyisocyanurate (ISO)
- ✔ Expanded Polystyrene (EPS)
- ✔ EPDM Roofing Membranes
- ✔ Ballasted EPDM Membrane
- ✔ Hardboard
- ✔ Flat Surfaces to slopes up to 1:12.
- ✔ Metal Deck (20 ga. And 22 ga. ONLY)
- ✔ Dens Deck
- ✔ Plywood

Do Not Use on the Following Surfaces:

- ✖ Metal Deck less than 22 ga. Or over 20 ga. (Structural Deck)
- ✖ Loose laid material not part of a complete finished system.
- ✖ Ice
- ✖ Snow
- ✖ Tectum Deck
- ✖ Concrete

Roofing Load Requirements

Before the Penetrator and cart are hoisted to any roofing deck the user MUST VERIFY THAT THE DECK CAN ACCOMMODATE THE LOAD REQUIREMENTS.

Verify that the surface that the Penetrator will be used on is capable of supporting both the unit and personnel using it. Inspect that the entire area to determine if the working surfaces have the strength and to support users safely.

CAPACITY: The Penetrator Mobile Fall Protection System is designed for a maximum of three persons for fall arrest and two for fall restraint with a combined weight (clothing, tools) of no more than 310 lbs. per person. No more than five persons may be connected to the Penetrator at any time.

IMPORTANT: DO NOT start work for which fall protection is required until the Penetrator and corresponding FRS or PFAS have been completely installed. Do NOT disable any part of the FRS or PFAS, including the Penetrator unit, or reposition the unit, until work for which fall protection is required has ceased.

Placement/Repositioning of the Penetrator Safety Cart

The attachment tie-off anchor shackles must be pointed toward the leading edge and the cart is set to travel parallel to the unprotected edge or leading edge.

Position the Penetrator such that the front guard plate is between 4 to 15 feet from the leading edge, and in line with the center of the area to be worked.

IMPORTANT: When repositioning the Penetrator Cart, active fall restraint is maintained by a maximum length of five feet less than the distance of the cart to the leading edge. Once repositioned, the tow handle must be in the down position in order to lock the wheels and the steering locking pin must be inserted into the steering mechanism (see below right).

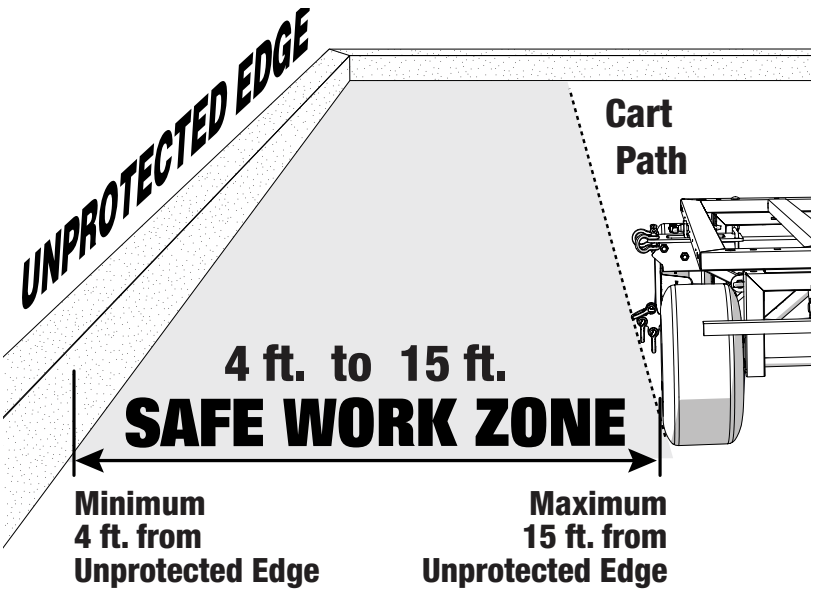

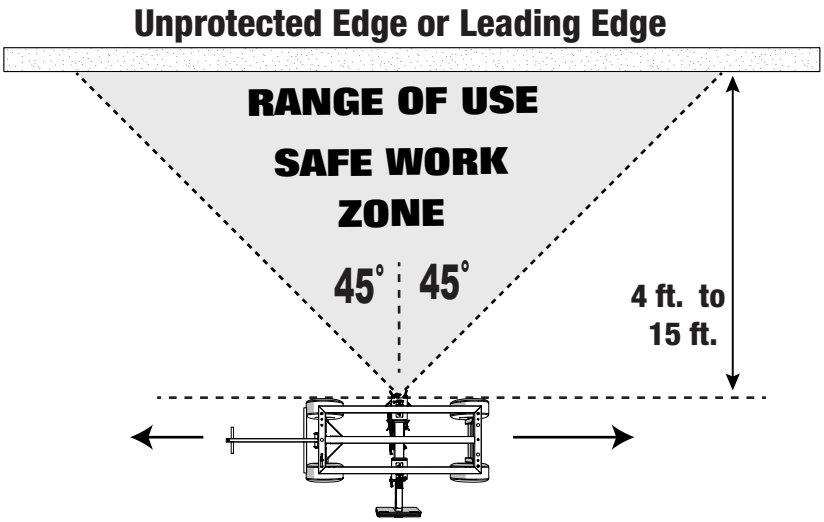

Prior to Positioning the Penetrator:
Verify that the surface is capable of supporting the Penetrator, ballast weights, cart, and all personnel using it.

During Repositioning the Penetrator:
Active fall restraint is maintained by a maximum length of five feet less than the distance of the cart to the leading edge.

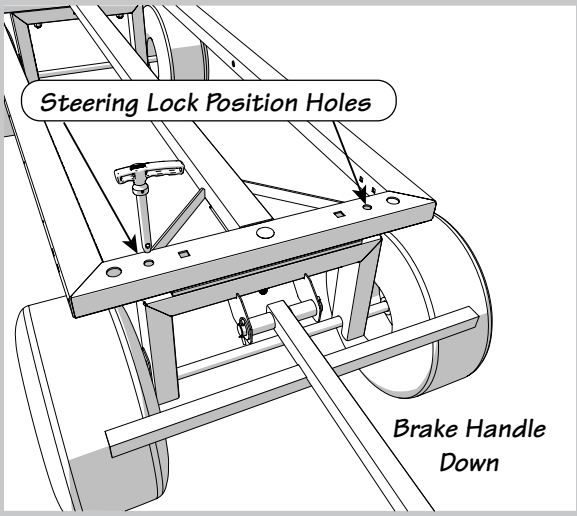

Make sure the handle/tire brake mechanism is in the down position and the brake stop rests firmly against the front tires. Place the Pull Pin into the front axle fork through the appropriate hole located on either side of the cart by aligning with the roof cart frame tube with the front axle fork. This will prevent the cart from turning.

Setting the Ballast Slide and Weights

DO NOT use the Penetrator Roofing Cart without the ballast slide extended and all ballast weights applied.

Once the location for the operation of the Penetrator has been determined, the ballast slide must be adjusted to the proper operational length.

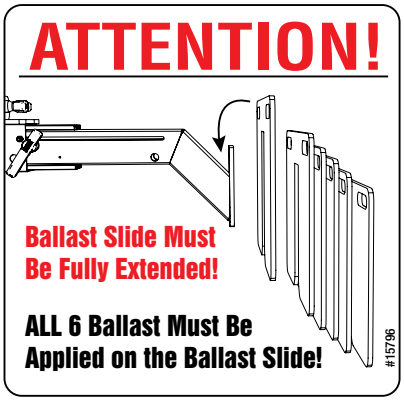

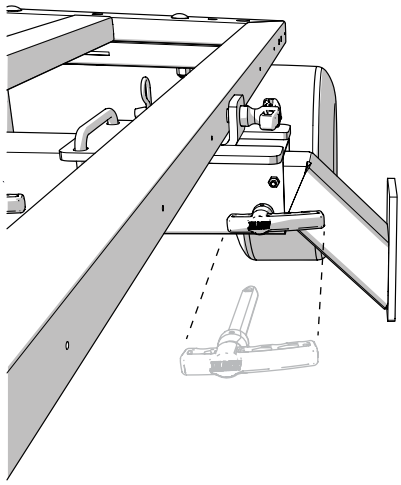

Step 1
Pull the cotter pin from the pull pin and remove the entire pull pin.

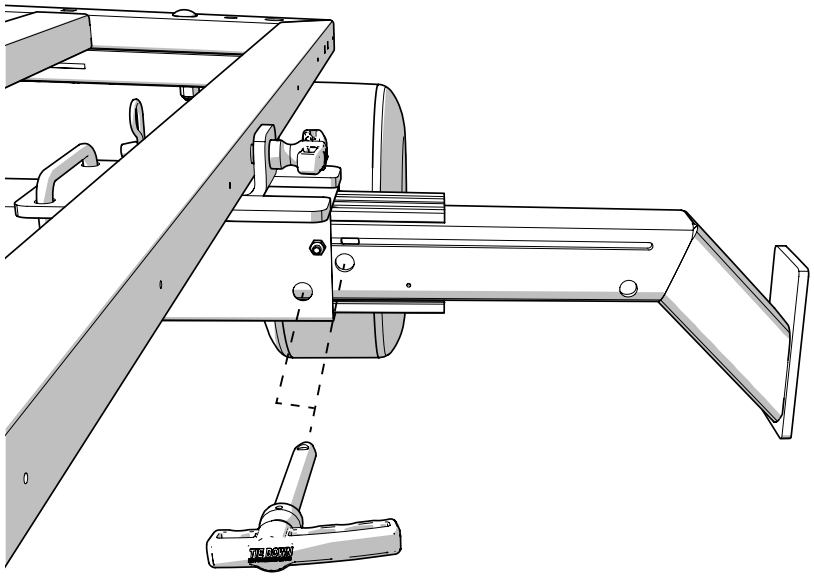

Step 2
Pull out the ballast slide assembly until the ballast slide mounting hole is visible.

Step 3
Replace the pull pin through the ballast slide mounting hole and reattach the cotter pin

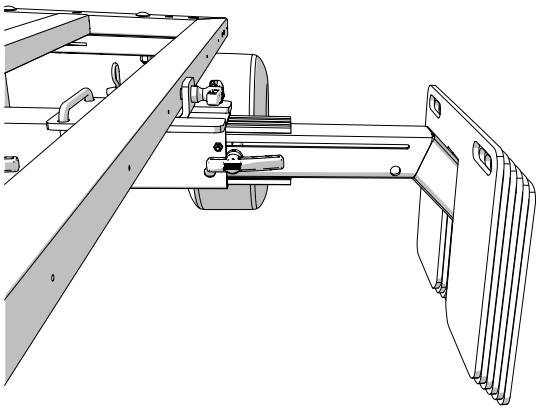

Step 4
Carefully place the ballast weights one at a time. Be carefully when placing the ballast, each weight has the potential of being a Pitch Point.

DO NOT USE THE PENETRATOR WITHOUT THE BALLAST SLIDE ARM EXTENDED AND THE BALLAST WEIGHTS APPLIED.

Connecting to the Penetrator Safety Cart

DO NOT hook Personal Fall Arrest System (PFAS) to any point except a Fall Arrest or Fall Restraint Tie-off Anchor Shackle

When making connections, only use double-locking snap hooks and double-locking carabiners with this equipment. Only use connectors that are suitable to each application. Ensure all connections are compatible in size, shape and strength. Do not use equipment that is not compatible. Ensure that all connectors are fully closed and locked.

The Fall Restraint Tie-Off Shackles
Two Fall Restraint Anchor Shackles are installed on the top side of the Penetrator where labeled. The Fall Restraint Anchor Shackles DO NOT arrest falls . The user must insure that the Fall Restraint worker is personally equipped with lanyards, harnesses, safety lines, etc., when working in conjunction with potential fall arrest workers.
Do Not allow the fall restraint user to work close to any roof edge.

FALL ARREST TIE-OFF Shackles
The three Fall Arrest Tie Off shackles are located on the lower side of the Penetrator, in front of the stay clear guard as labeled. The user must insure that the lanyards and harness are properly attached.

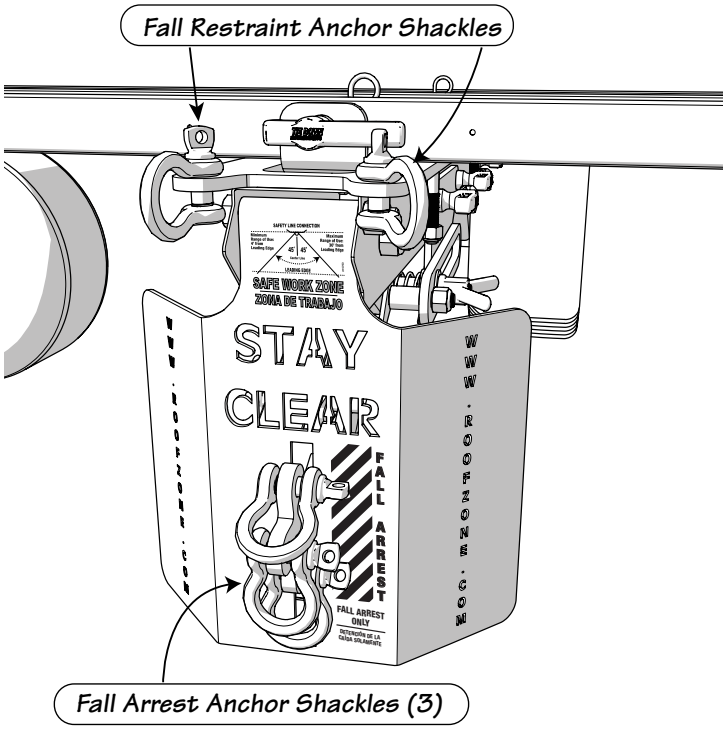

IMPORTANT: Confirm all screw pins on all five anchor shackles are fully inserted prior to attachment of Fall Restraint or Fall Arrest lines.

IMPORTANT: DO NOT allow workers to cross paths (cross lines) at anytime! Fall Restraint/Fall Arrest lines must never cross over each other. Crossed lines will cause the unit to not function as intended. Failure to maintain clear lines may cause a accident or death.

Before Using the Penetrator

OSHA requires that before operating the system there must be an inspection for damaged equipment.

1 Check for loose, bent or damaged parts, including the three penetrating spikes.
2 Check welded components for distortion, cracks, or other damage.
3 Check Tie-off shackles for distortion or damage and confirm that they are properly tightened.
4 Check retaining slide bars for rusting and/or wear before each use.
5 All labels must be present and fully legible. (Copies of all labels are attached at the back of this section for accurate inspection.)
6 Check for all pull pins that they are fully inserted and the safety cotter pin clips are attached to each pull pin.

IMPORTANT: BEFORE USING THIS UNIT, A RESCUE PLAN MUST BE ADOPTED.

OSHA requires employers to provide a quick rescue of employees in the event of a fall or employers shall assure that employees are able to rescue themselves. It is impossible to guarantee that an employee can rescue himself because he may be unconscious or injured as a cause or result of the fall. Therefore, a procedure involving rescuers must be adopted.

Consult with your roofing distributor/supplier for fall rescue equipment.

DO NOT OPERATE DAMAGED EQUIPMENT. DO NOT OPERATE EQUIPMENT THAT HAS BEEN MODIFIED.
(Please use the Inspection and Maintenance Log contained within the instructions manual)

Maintenance and Care

- ✔ Inspect Penetrator before and after each use.
- ✔ Keep wheels free from roofing debris. Any asphalt or adhesives on the tires can cause the wheel brake to function improperly.
- ✔ Regularly inspect for damaged or missing parts and do not place the Penetrator into service until all missing and or damaged parts have been replaced.
- ✔ Store the Penetrator in a place protected from weather and where only authorized employees have access.
- ✔ Maintain finish to prevent corrosion.

General Safety Precautions

USE COMMON SENSE! Most accidents can be avoided by using common sense and concentrating on the job at hand. Look around and confirm a safe distance from the roof edge is being maintained.

The Penetrator should not be used by persons whose ability or alertness is impaired by fatigue, intoxicating beverages, illegal or prescription drugs, or any other physical cause that exposes the user or others to injury.

Always wear proper safety attire.

Keep hands and feet clear of moving parts. DO NOT stick hands or fingers in the equipment when workers are attached to the Penetrator.

Do not operate the equipment near electrical power lines. **ELECTRICITY KILLS!**

Do not allow passengers to ride on safety cart.

General Safety Precautions

Allow handle to drop and set brake when not in use. Insert the Pull Pin into the axle fork in order to prevent unwanted turning of the roof cart.

Ensure that all areas directly underneath, and in front of the cart, are clear and free of debris.

Do not use on roofs with ice or snow.

Only use the unit on a surface or roof composition for which it has been tested.

Do not set unit atop unfastened materials. Materials may slide if not mechanically attached to the roof.

Depending on added weight loaded on the Roof Cart / Penetrator unit (including all materials) additional workers may be required to safely move the unit. Always use caution when moving the unit.

Hoisting Safety Precautions

Loads may slip, if the Penetrator is not hoisted properly, this could result in injury or death.

Do not use with damaged slings or chains.

Utilize appropriate rigging gear for overhead lifting.

Utilize rigging gear within the industry standards and the manufacturer's recommendations.

Conduct regular inspection and maintenance of the rigging gear.

DO NOT hook to the fall arrest or fall restrain shackle safety line connectors when lifting the cart.

Do Not lift Penetrator Cart with materials on the cart when hoisting.

Procedure for Handling the Penetrator After a Fall

Before rescuing a fallen employee, check that the Penetrator is secure.

It is highly recommended that any rescuer be tied off in a FRS before attempting to aid in a rescue. The number of rescuers allowed to tie off to the Penetrator is 3 (three) minus the number of fallen workers. Up to 2 (two) additional rescuers may tie off to the Penetrator utilizing the two fall restraint tie-off shackles marked for FRS.

Prior to disengaging the Penetrator after deployment as the result of an fall incident, make certain that the rescue procedure has been successfully completed.

Procedure for Reseting the Penetrator After a Fall

Prior to disengaging the Penetrator after deployment as the result of an fall incident, make certain that the rescue procedure has been successfully completed.

The three penetrating spikes will be somewhat buried into the roof after activation.

Follow these steps to reset the Penetrator Device:

1. Remove the ballast weights.

2. Using at least two people, rotate the entire roofing cart while sliding it backward from the engagement point. Once the spikes are clear of the engagement area, it is safe to slowly lower the roofing cart.

3. Loosen the Wing Nuts on each side of the Spike engagement tube.

4. Standing behind the Penetrator, reach down through the roofing cart, and grasp the upper front sides of the outer spikes. Pull upward on the inner spike tube, as you pull up the front guard plate and other components will reset to their original positions.

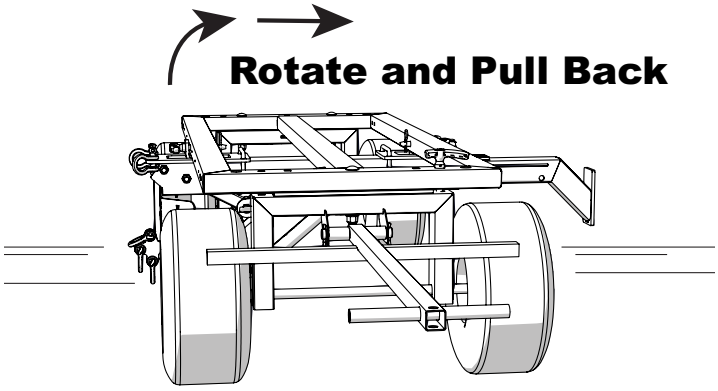

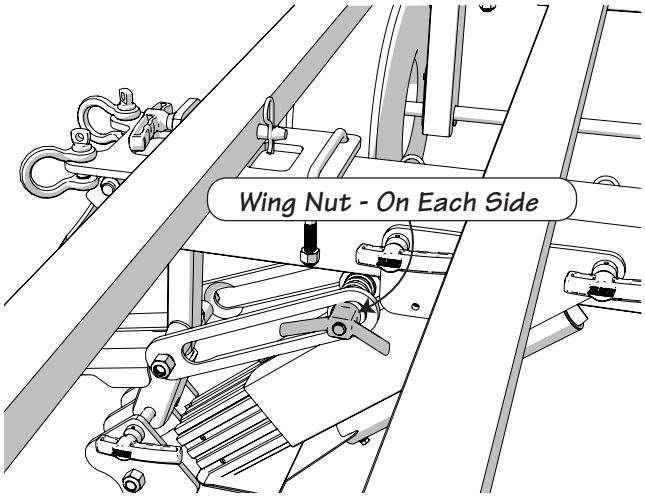

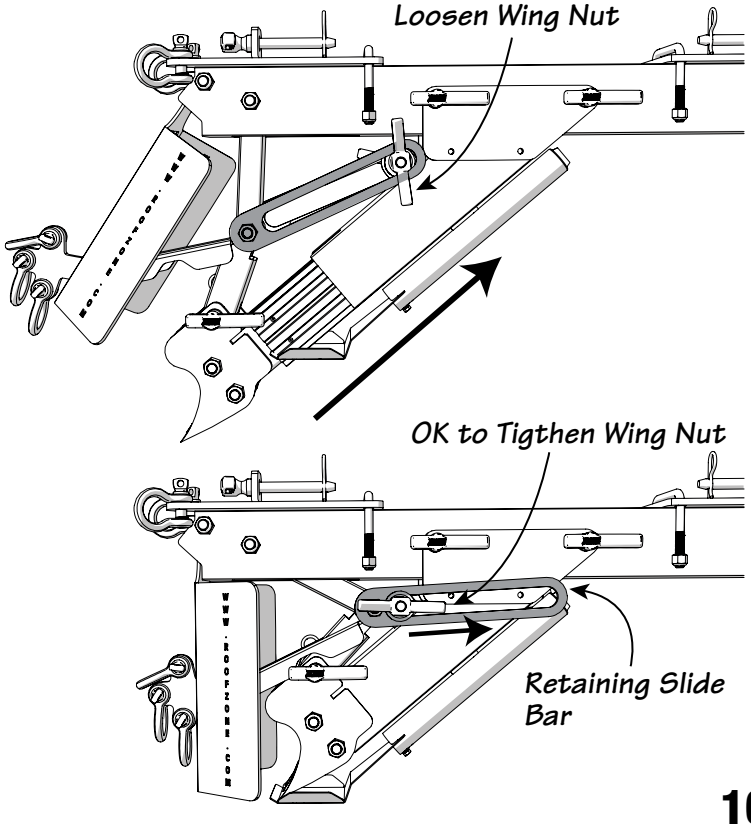

5. Continue pulling up the inner spike tube until it stops. When the inner spike tube is fully inserted into the outer engagement tube, firmly tension the two large wing nuts on both retaining slide bars until fully seated against the threaded slide bolt. (See illustration on the left).

Always use caution when disengaging the outer engagement tube as well as reinserting the inner engagement tube as these areas can become pinch points and cause bodily injury.

Do not reuse the Penetrator after incident until fully inspected and any damaged parts have been replaced and recertification and inspection has been performed.
See inspection check list on back cover.

Warning and Product ID Labels

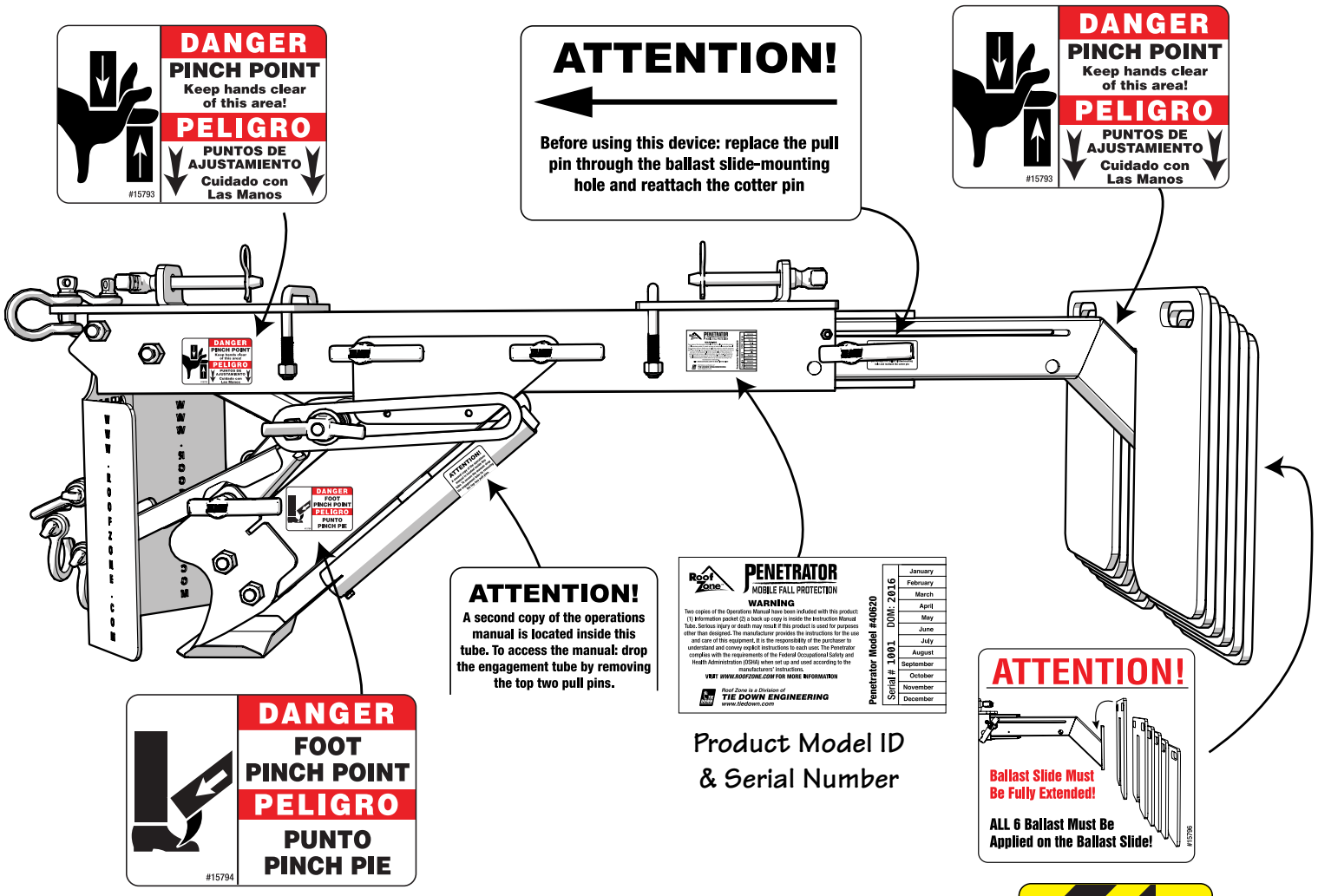

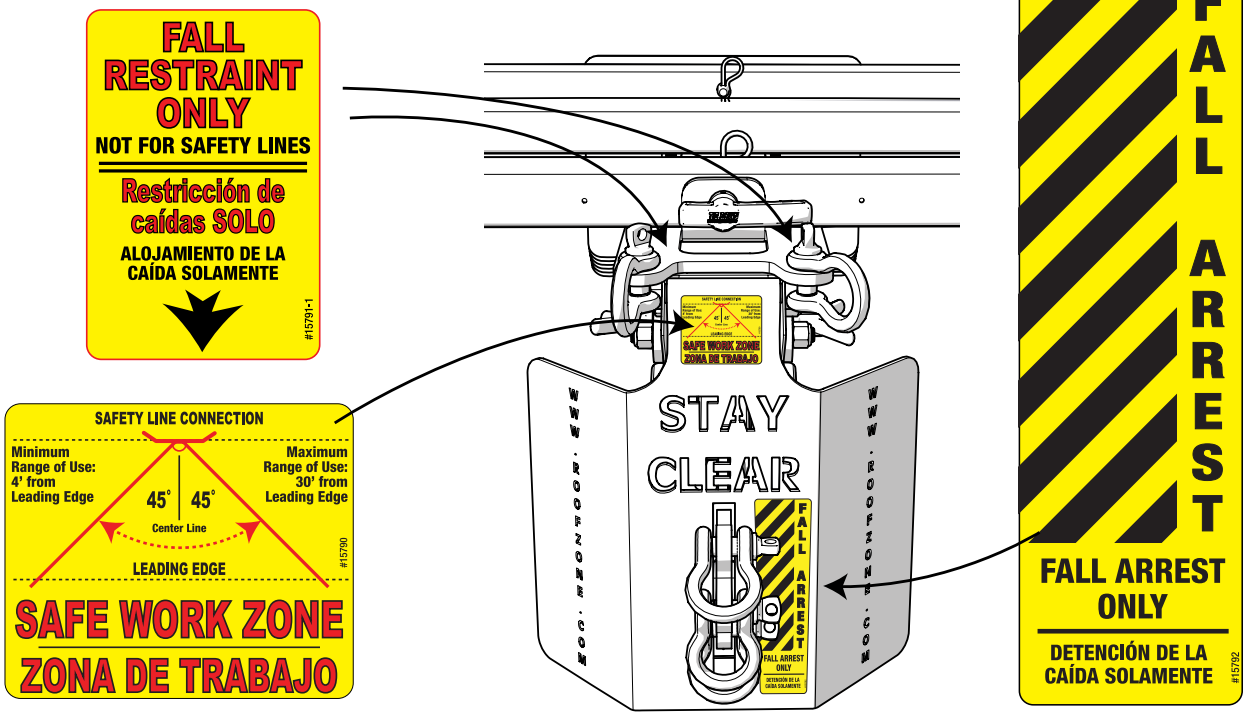

PENETRATOR
MOBILE FALL PROTECTION

Inspection Checklist and Maintenance Log

Roof Zone™

Penetrator Model #_____ **Date of Purchase:** _____

Serial Number: _____ **Purchased From:** _____

Roofing Cart **Date:**								
Frame: Free of Rust?								
Frame: Welded Connections?								
Steering Locking Pin Available?								
Steering Handle/Brake Works?								
Axles/Wheels Rotate Properly?								
Overall Cart Parts?								

Penetrator Device **Date:**								
Frame: Free of Rust?								
Frame: Welded Connections?								
Mounting Pins (2)?								
Ballast Slide: Slides In and Out?								
Ballast Slide: Pin Available?								
Penetrator Spikes Free of Damage?								
All Ballast Weights Available (6)?								
Spike Guard Shield Present?								
Anchor Shackles and Pins Available (5)?								
Anchor Shackles and Pins Tightened?								
Retaining Slide Bar Clear of Any Obstructions?								
Wing Nut Tightened/Retaining Slide Bar?								
Inner/Outer Spike Tube Engaged? (If “Yes” DO NOT USE)								
Pull Pins (5) Secured with Safety Cotter Pin?								
Safety and Warning Labels Readable?								

Date **Corrective Action Taken:**