TranzSporter

Wall Jack
Parts List/Diagram

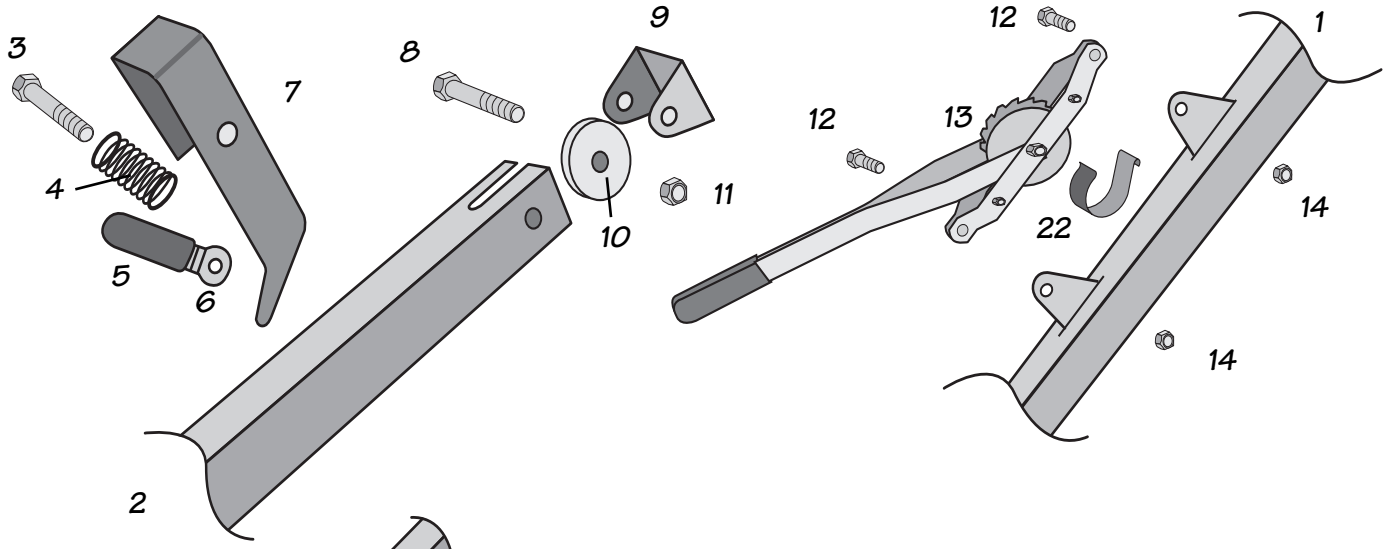

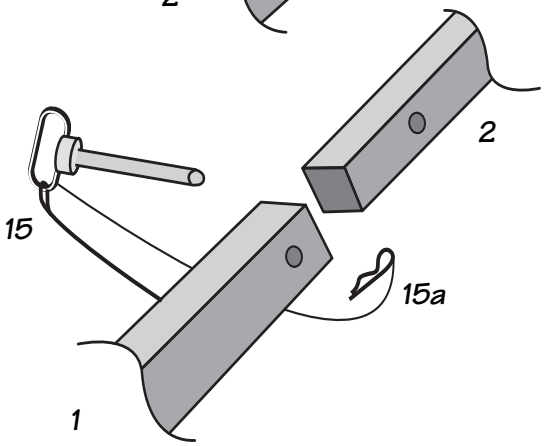

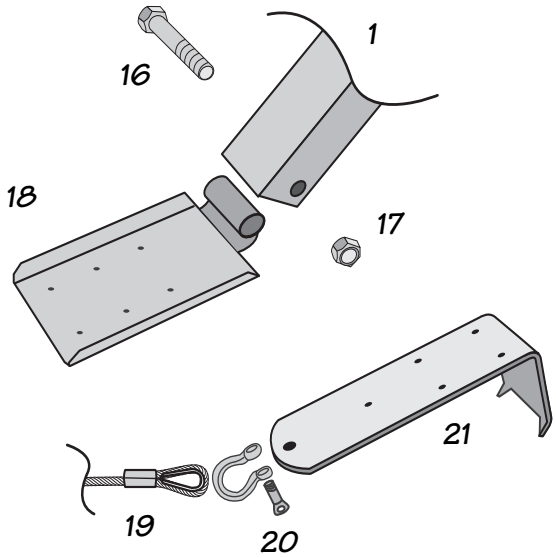

ID #	Part #	Description
1	48581-1	16' Lower Tube (excludes foot, pin/chain and winch)
2	48581-2	16' Upper Tube (excludes pulley)
1	48582-1	20' Lower Tube (excludes foot, pin/chain and winch)
2	48582-2	20' Upper Tube (excludes pulley)
1	48583-1	23' Lower Tube (excludes foot, pin/chain and winch)
2	48583-2	23' Upper Tube (excludes pulley)
3	10826	1/2"x 3" Carriage Bolt
4	10113	Wall Stop Spring
5	17545	Wall Stop Plastic handle Cover
6	48581-8	Wall Stop Handle
7	48581-7	Adjustable Wall Stop
8	10541	Bolt 1/2" x 3-1/2"
9	48581-9	Top Cap
10	10079	Top Pulley
11	10645	Nyloc nut 1/2"
12	10952	Bolt 5/16"
13	17140	Winch-same for all models (without cable)
14	10650	5/16" Nyloc nut
15	50389	Safety Pin/Clip and cables
15a	10592A	Safety Pin with Clip (only)
16	10808	Bolt 5/8" x 3.5"
17	10628	Nyloc Nut 5/8"
18	48581-3	Wall Jack Foot
19	50386	Cable and Shackle (for 16 ft. model)
19	50387	Cable and Shackle (for 20 ft. model)
19	50388	Cable and Shackle (for 23 ft. model)
20	13138	Shackle - 1/4" heavy duty
21	48581-4	Lifting Wall Bracket
22	10121	Tension Spring

TIE DOWN ENGINEERING • 5901 Wheaton Drive • Atlanta GA, 30336
www.tiedown.com • (404) 344-0000 • Fax (404) 349-0401

TIE DOWN ENGINEERING

110405,E766